PRODUCT HANDBOOK

Bongchie

TAKE IT EASY

PRE—ROLLED CONES

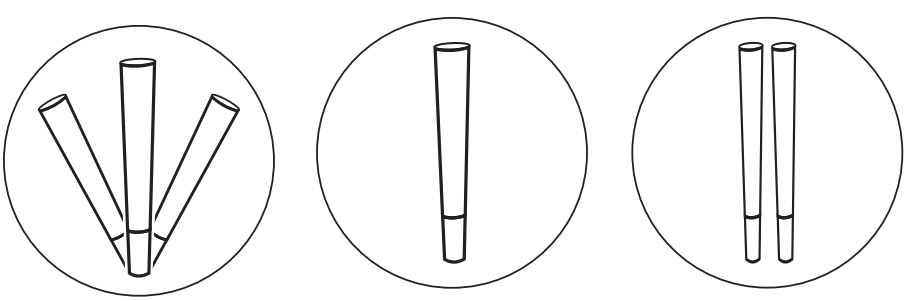

PERFECT ROLL

NATURAL

WHITE

PINK

BLUE

MRP: ₹ 15/-(per Cone)

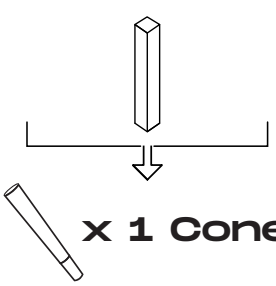

x 1 Cone

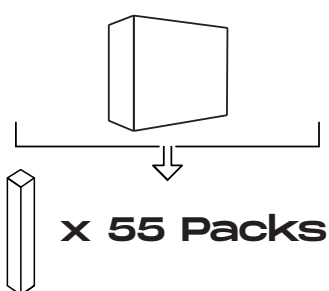

x 55 Packs

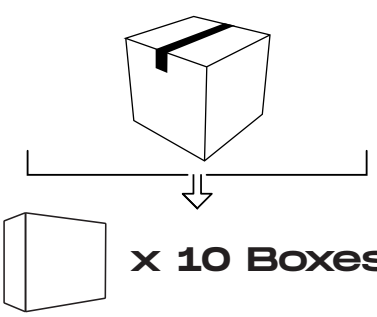

x 10 Boxes

PERFECT ROLL

SLIM

MRP: ₹ 30/-(per Cone)

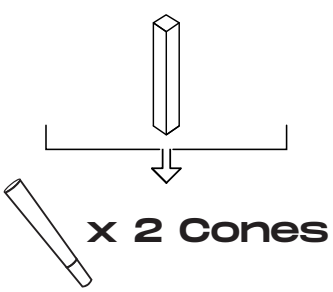

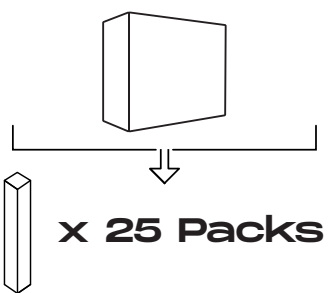

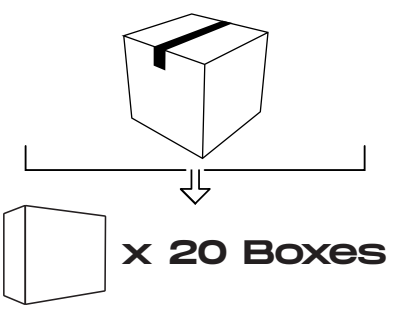

PERFECT ROLL

JAR

MRP: ₹ 500/-(per Jar)

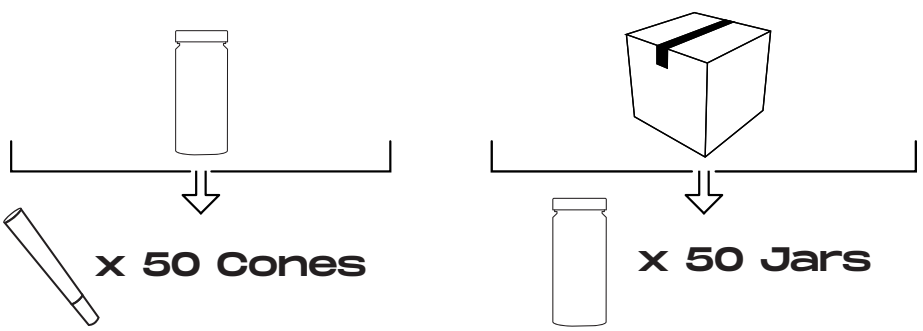

DOLLAR CONES

JAR

MRP: ₹ 750/-(per Jar)

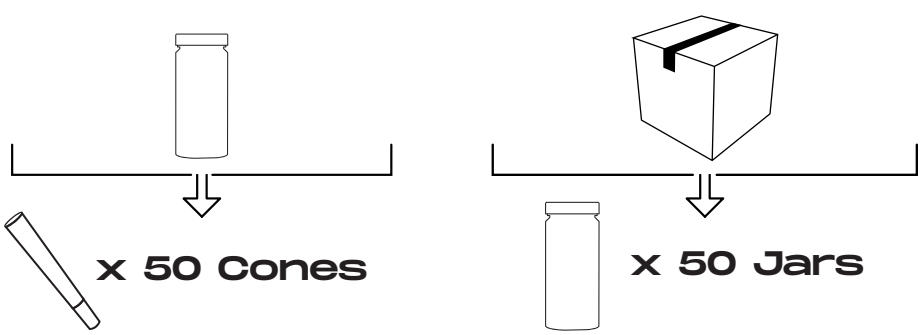

DOLLAR CONES

MRP: ₹ 20/-(per Cone)

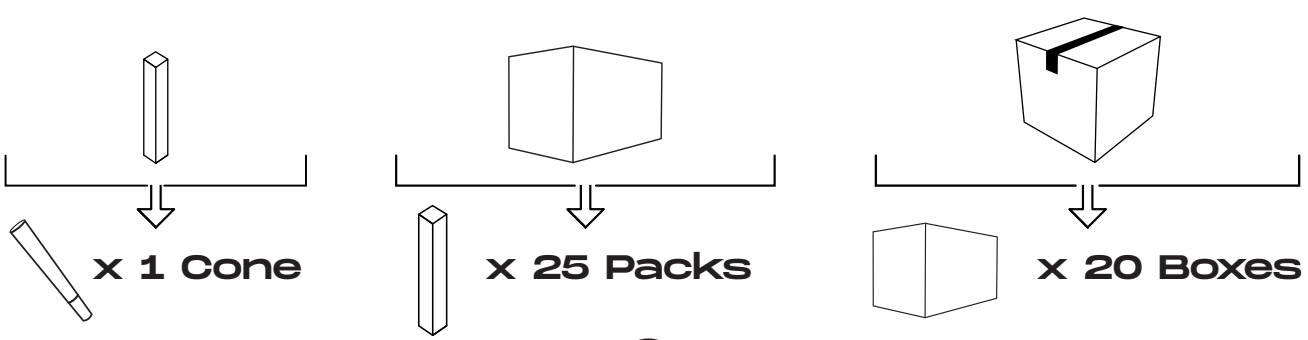

ROSE BLUNT

MRP: ₹ 120/-(per Cone)

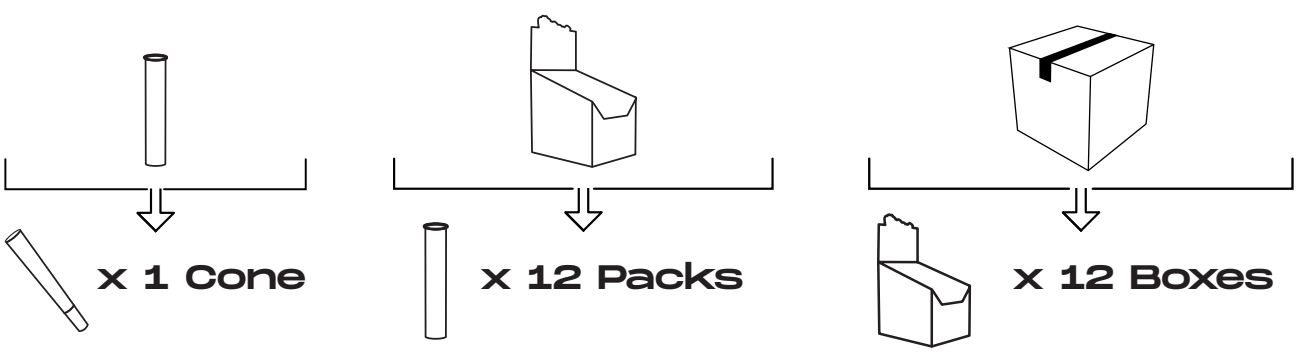

HEMP BLUNT

MRP: ₹ 20/-(per Cone)

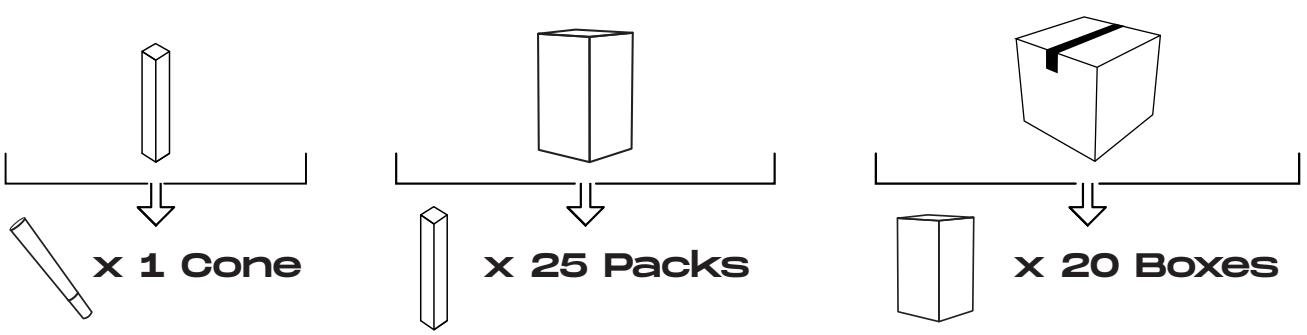

TEA LEAF BLUNT

MRP: ₹ 40/-(per Cone)

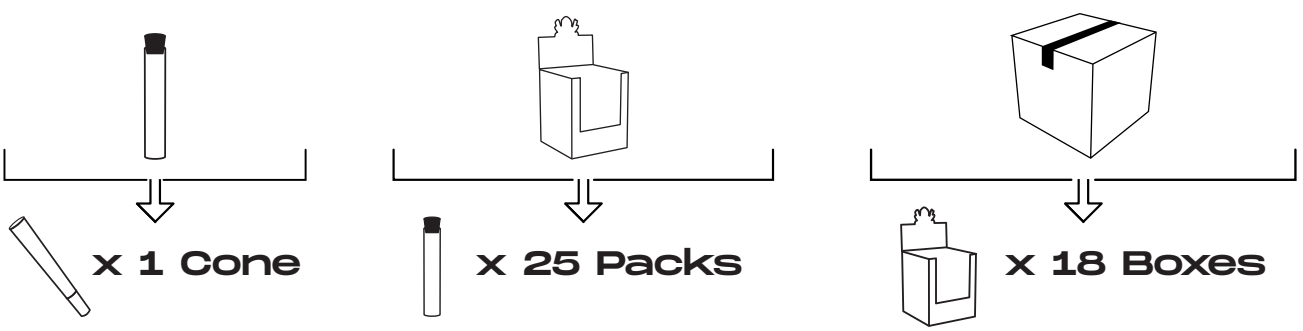

BONGCHIE BURST

POP–N–PUFF

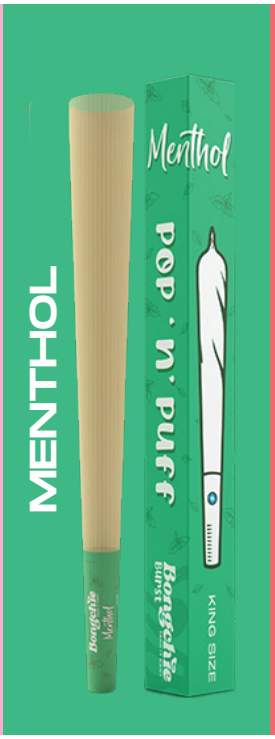

MRP: ₹ 20/-(per Cone)

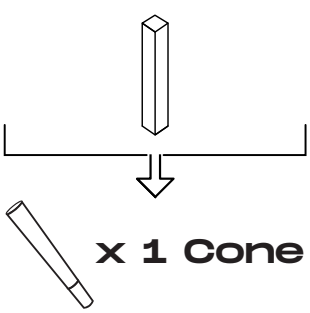

x 1 Cone

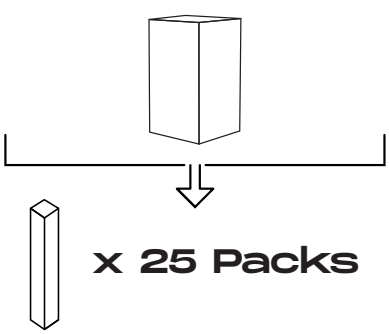

x 25 Packs

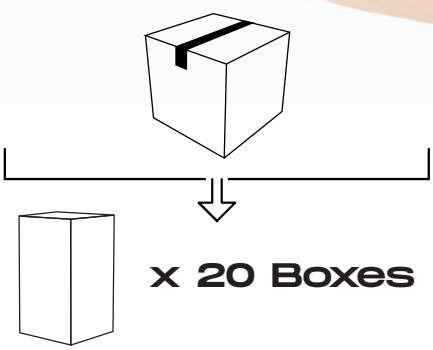

x 20 Boxes

BIGG BOBB

NATURAL

WHITE

MRP: ₹ 49/-(per Cone)

x 1 Cone

x 50 PACKS

ROLLING PAPERS

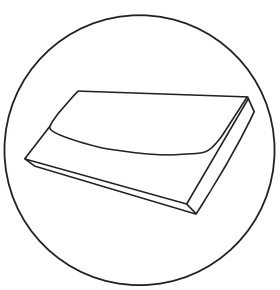

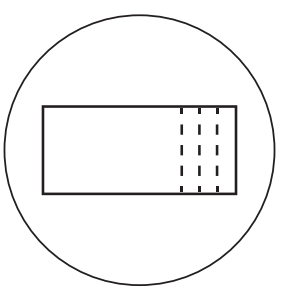

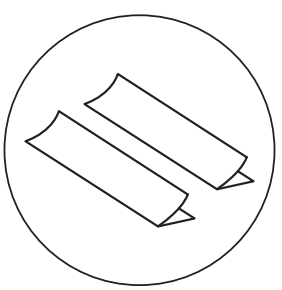

MOZO

WHITE

MRP: ₹ 80/-(per Booklet)

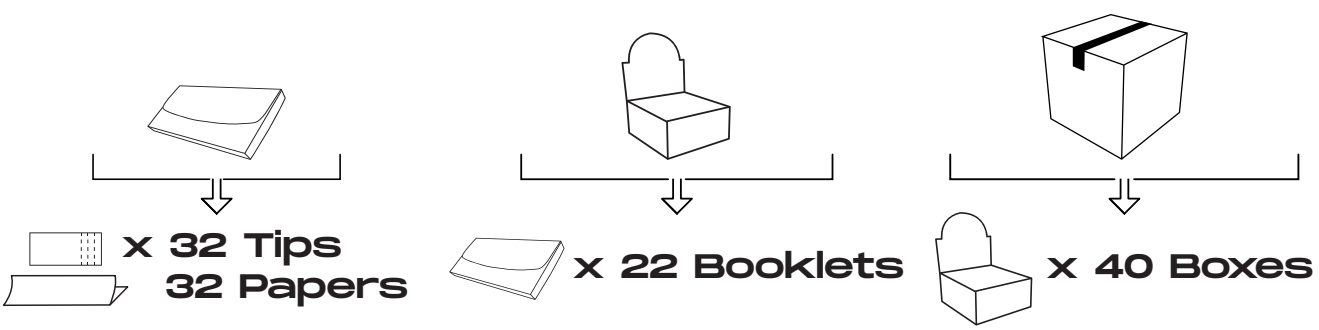

MOZO

NATURAL

MRP: ₹ 90/-(per Booklet)

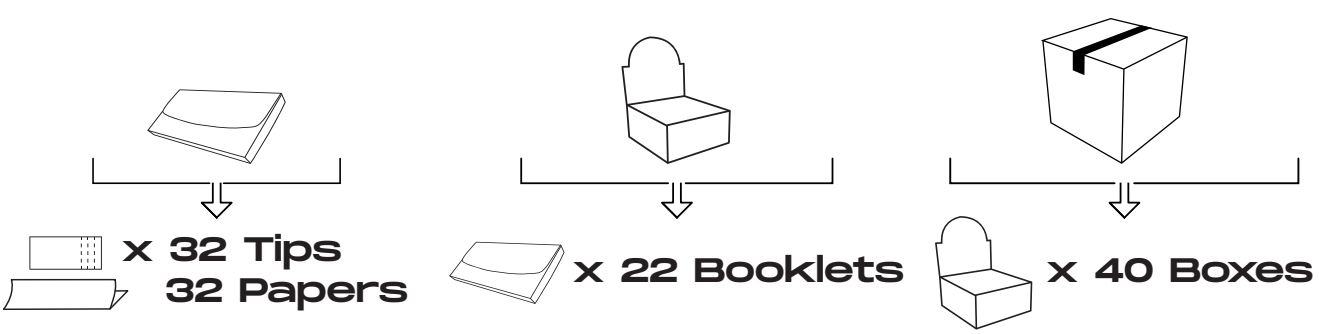

MOZO

WHITE

MRP: ₹ 50/-(per Booklet)

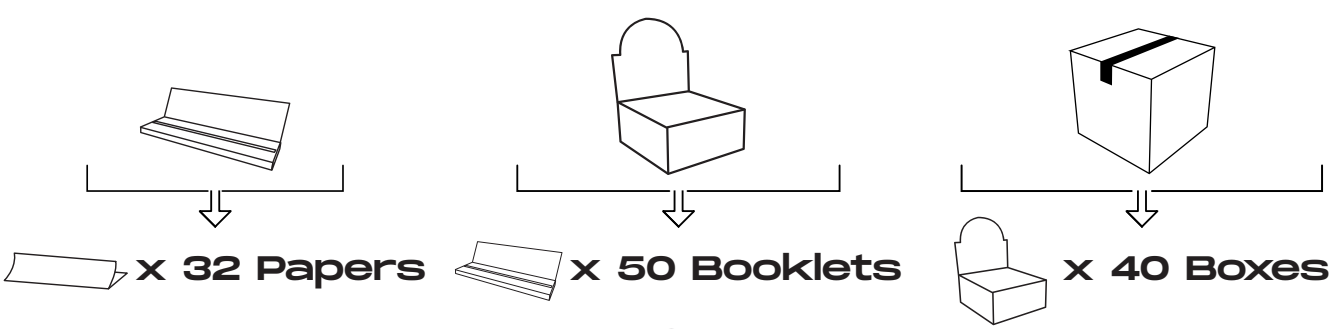

MOZO

NATURAL

MRP: ₹ 50/-(per Booklet)

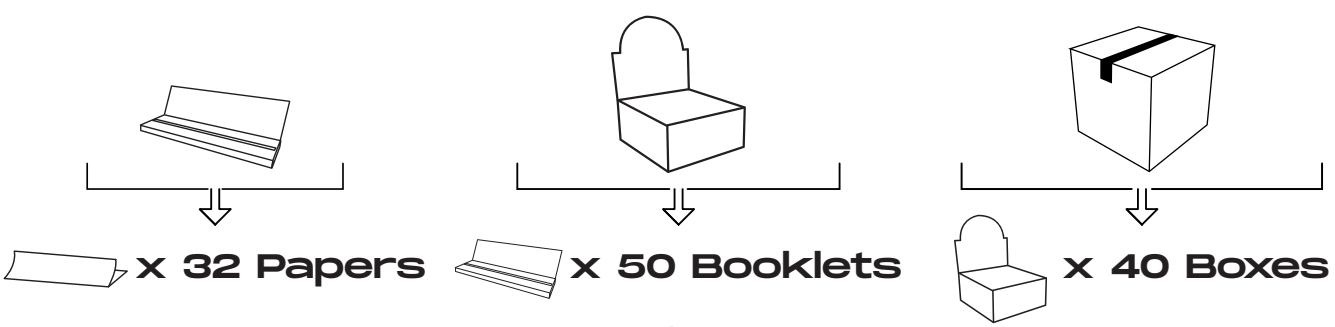

MOZO ONE 1/4

WHITE

MRP: ₹ 60/-(per Booklet)

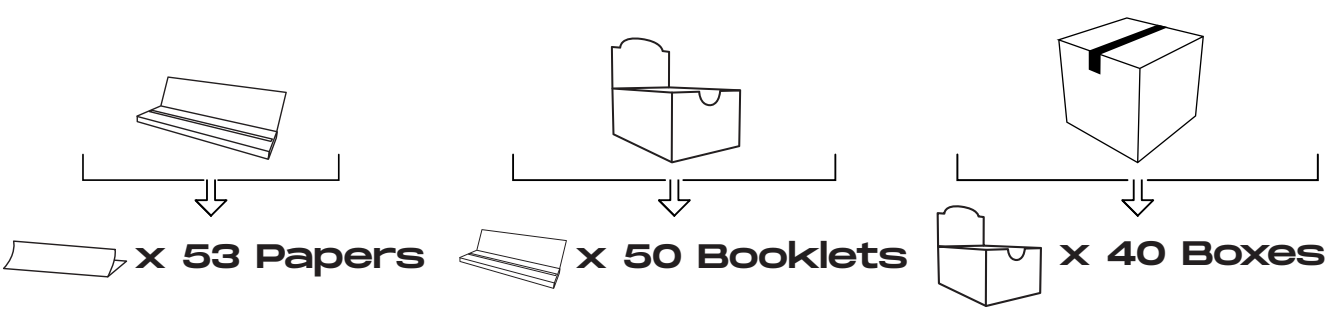

MOZO ONE 1/4

NATURAL

MRP: ₹ 60/-(per Booklet)

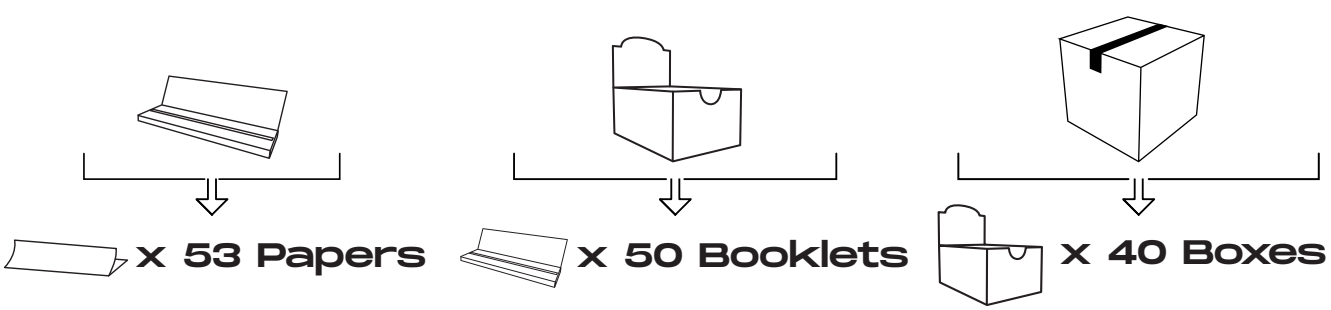

MOZO ONE 1/4

WHITE WITH FILTER

MRP: ₹100/-(per Booklet)

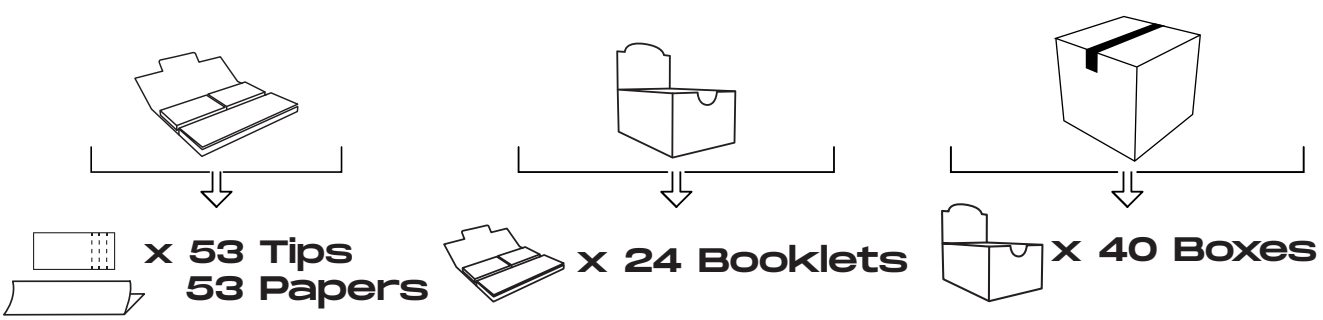

MOZO ONE 1/4

NATURAL WITH FILTER

MRP: ₹ 100/-(per Booklet)

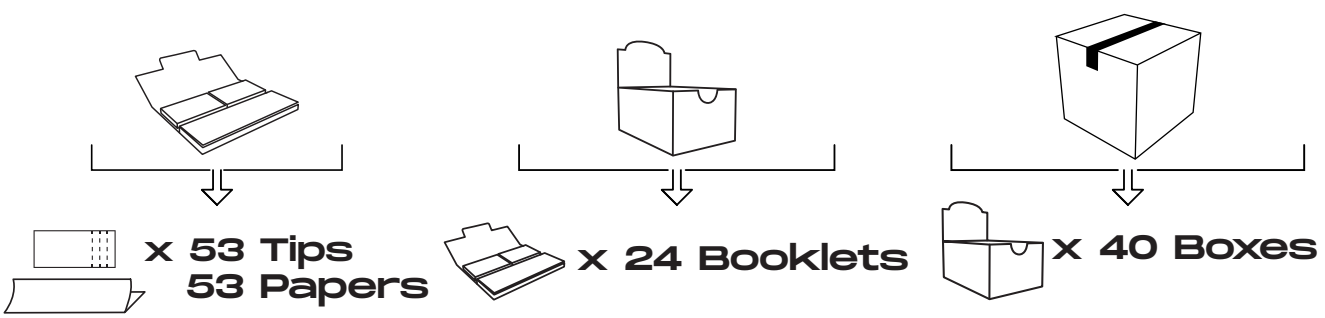

MOZO STARPACK

NATURAL WITH FILTER

MRP: ₹120/-(per Booklet)

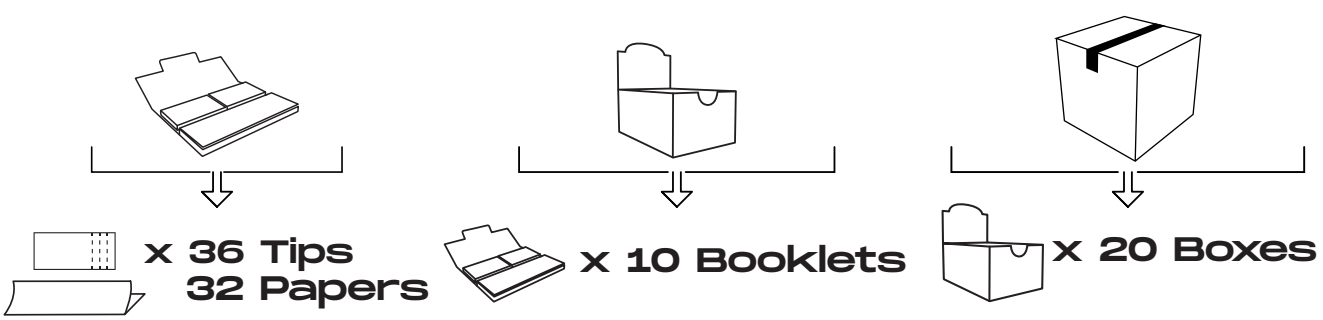

BONGCHIE DOUBLE

MRP: ₹ 220/-(per Booklet)

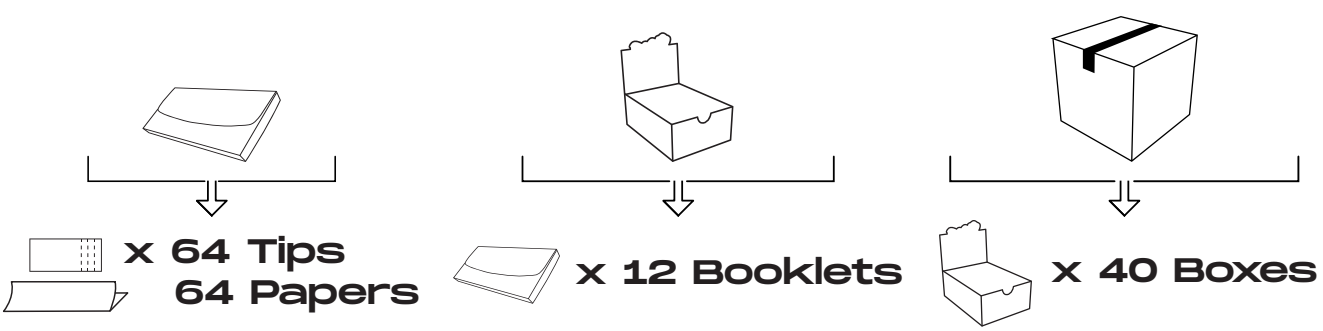

24K GOLD PLATED PAPER

MRP: ₹ 599/-(per Leaf)

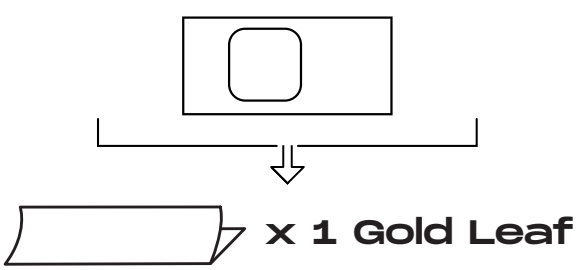

THRICE-A-DAY

BLACK EDITION

MRP: ₹10/-(per Pack)

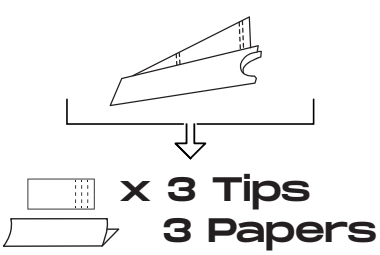

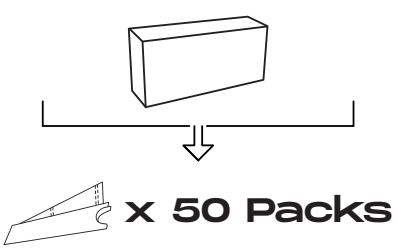

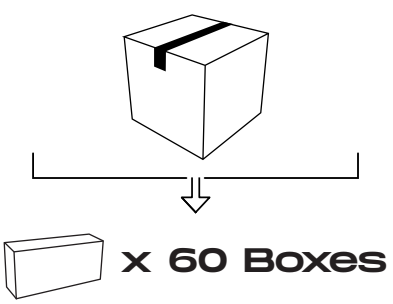

THRICE-A-DAY

PURPLE HAZE

MRP: ₹10/-(per Pack)

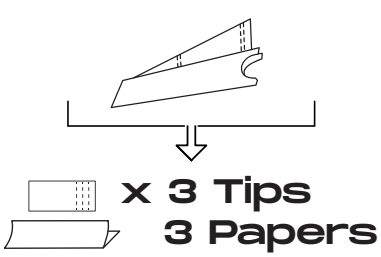

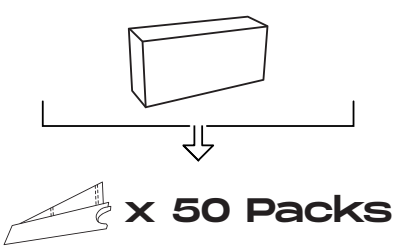

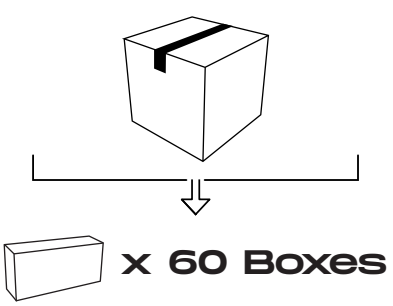

THRICE–A–DAY

NATURAL

WHITE

PURE HEMP

MRP: ₹10/-(per Pack)

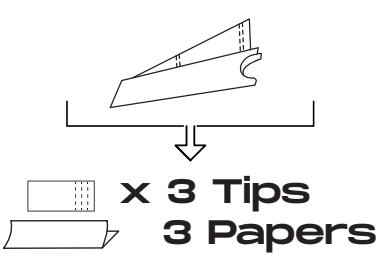

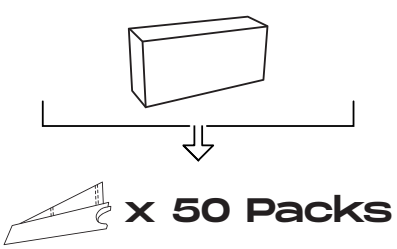

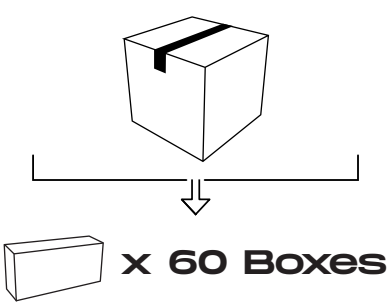

HEMP WRAPS

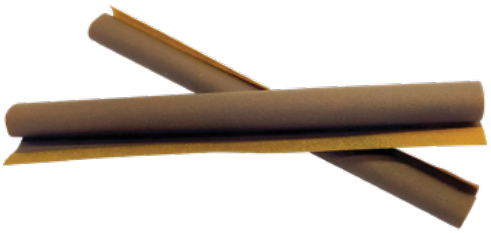

VANILLA

BLUEBERRY

CHOCOLATE

MINT

GRAPE

MRP: ₹ 80/-(per Pack)

x 2 Hemp Wraps

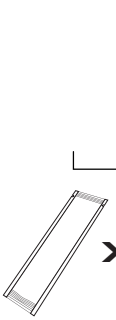

x 10 Packs

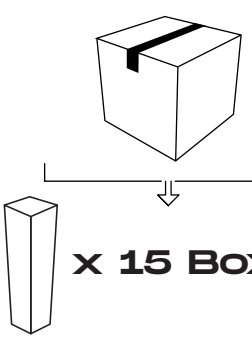

x 15 Boxes

SMOKING ACCESSORIES

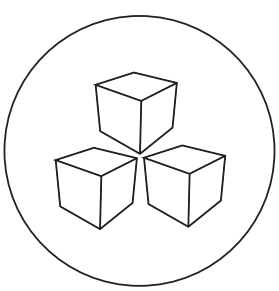
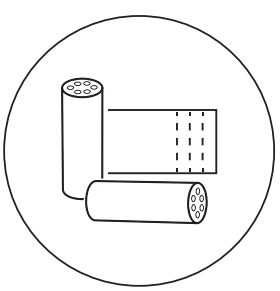
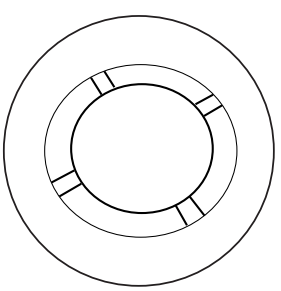
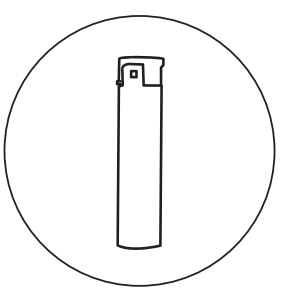

JET LIGHTERS

BLS–JL24

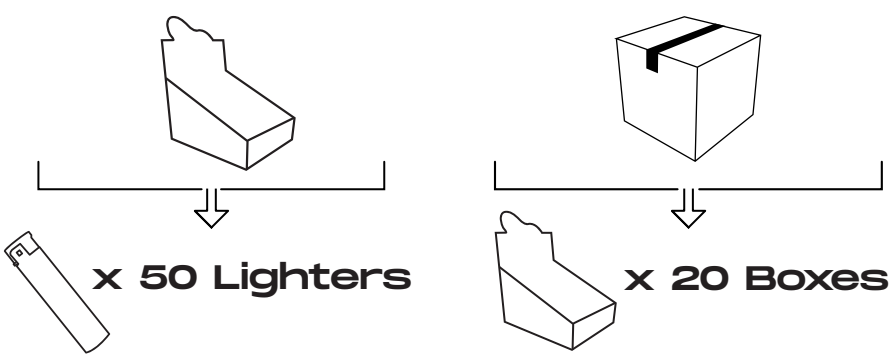

SLIM ELECTRIC LIGHTERS

BLS–8024

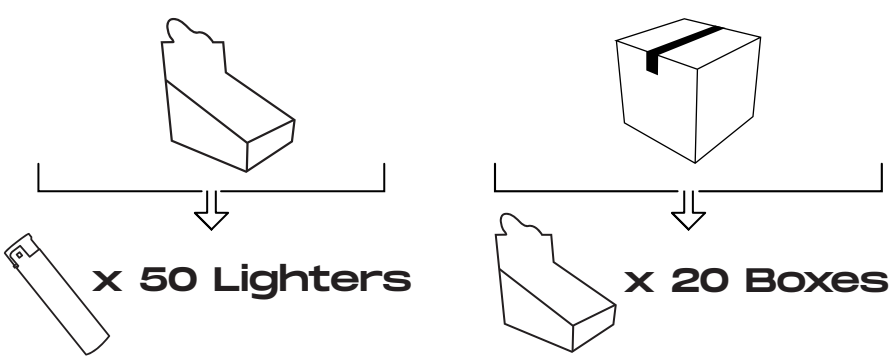

UNIVERSAL LIGTHER GAS CAN

MRP: ₹ 299/-(per Can)

550 ml

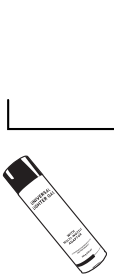

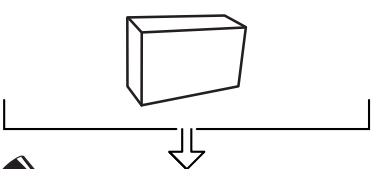

x 6 Cans

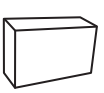

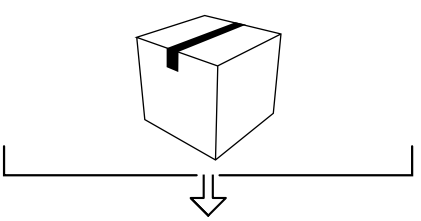

x 4 Boxes
(24 cans)

MAGIC COAL

MRP: ₹ 80/-(per Pack)

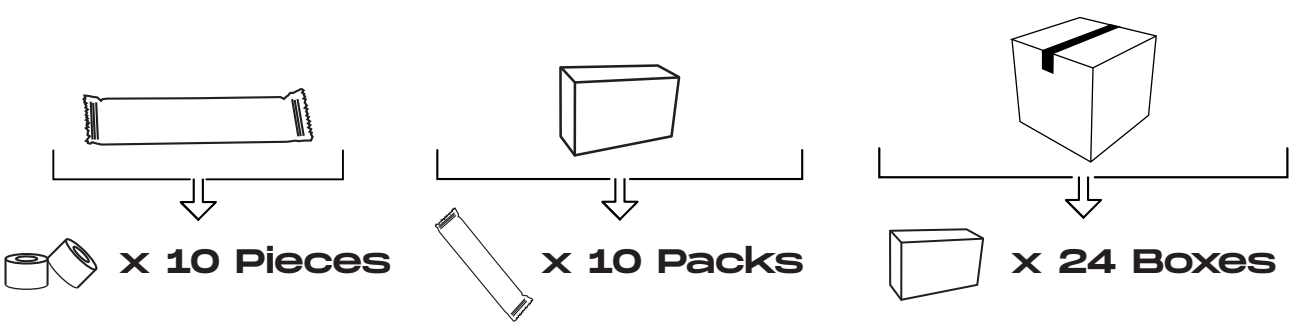

COCONUT COAL
(CUBE)

MRP: ₹125/-(per Box)

x 18 Cubes (250g)

x 40 Packs (10 kg)

COCONUT COAL
(FLAT)

MRP: ₹125/-(per Box)

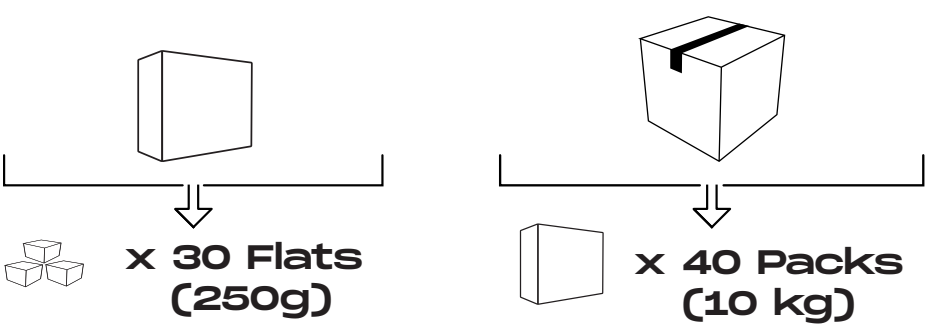

FILTER TIPS

MRP: ₹ 30/-(per Booklet)

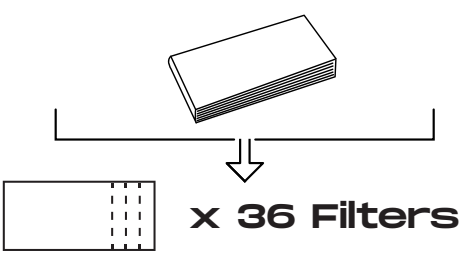

x 36 Filters

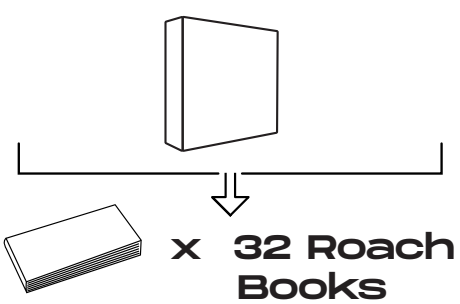

x 32 Roach Books

GLASS FILTER TIP

MRP: ₹ 50/-(per Pack)

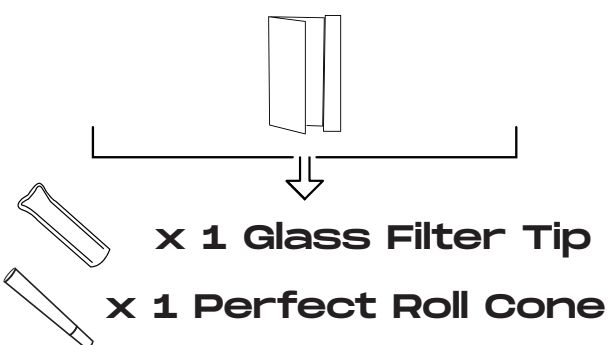

x 1 Glass Filter Tip

x 1 Perfect Roll Cone

ACTIVE FILTERS

SLIM 6x25MM

MRP: ₹ 250/-(Pack of 10)

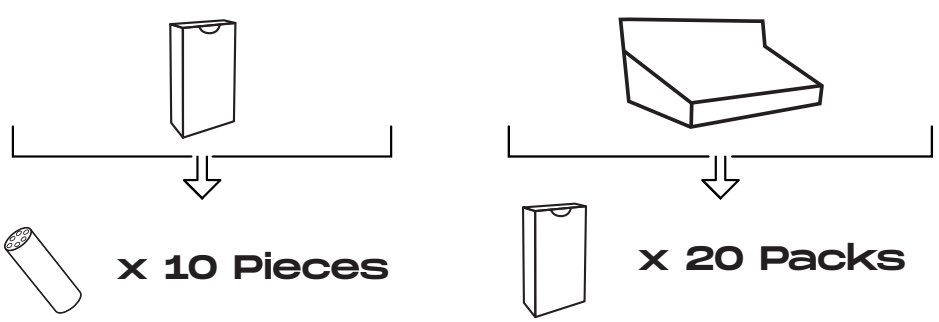

ACTIVE FILTERS

SUPER SLIM 5.3x25MM

MRP: ₹ 250/-(Pack of 10)

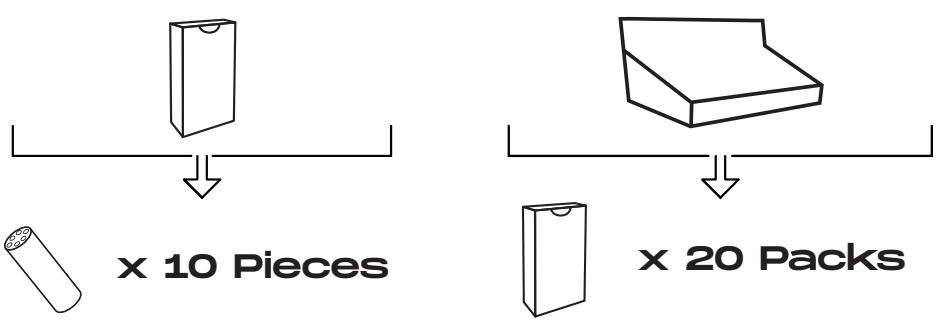

TORPEDO

BLACK

LAVENDER

GOLD

MRP: ₹ 999/-(per Piece)

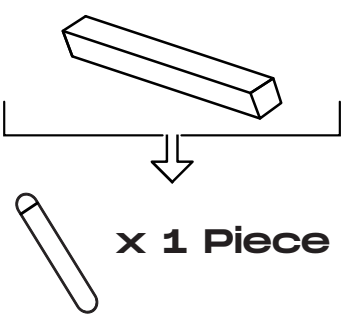

x 1 Piece

METAL ASHTRAY

14.3 cm

1.5 cm

MRP: ₹ 299/-(per Piece)

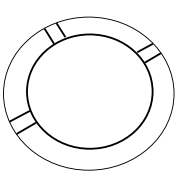

X 1 Piece

EASY
ROUND GLASS ASHTRAY

10.7 cm

3.4 cm

MRP: ₹ 350/-(per Piece)

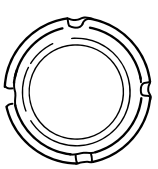

X 1 Piece

NEBULA
SQUARE GLASS ASHTRAY

MRP: ₹ 350/-(per Piece)

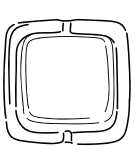

X 1 Piece

GRAFFITI
METAL ROLLING TRAY
(SMALL)

MRP: ₹ 250/-(per Piece)

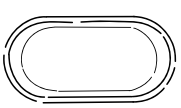

X 1 Piece

PIXEL
METAL ROLLING TRAY
(MEDIUM)

MRP: ₹ 300/-(per Piece)

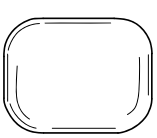

X 1 Piece

METAL ROLLING TRAY

16 cm

27 cm

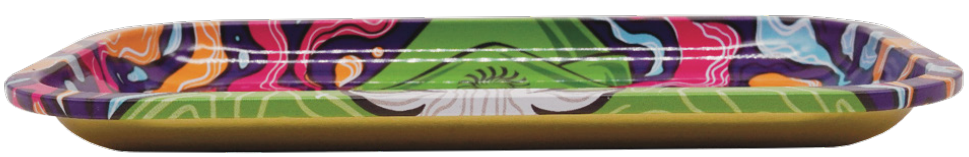

2.3 cm

MRP: ₹ 499/-(per Piece)

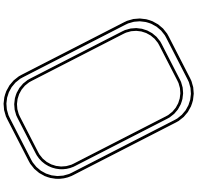

X 1 Piece

TOKE DADDY
OVAL GLASS MIXING TRAY

10.7 cm

15.5 cm

MRP: ₹ 300/-(per Piece)

X 1 Piece

KUSHED
ROUND GLASS MIXING TRAY

11.3 cm

MRP: ₹ 300/-(per Piece)

X 1 Piece

HONEYCOMB BIODEGRADABLE GRINDER

MRP: ₹ 250/-(per Piece)

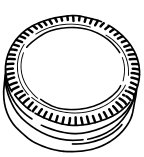

X 1 Piece

Terrain Grinder

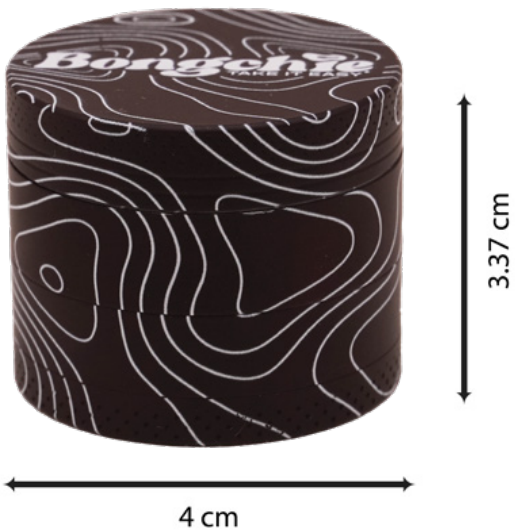

MRP: ₹ 650/-(per Piece)

X 1 Piece

QUICKSILVER GRINDER

MRP: ₹ 650/-(per Piece)

X 1 Piece

DRIP
ALUMINIUM GRINDER

MRP: ₹ 1199/-(per Piece)

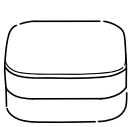

X 1 Piece

BONGS

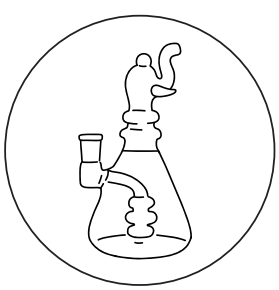

LIL SHROOM
(EXTRA SMALL)

MRP: ₹ 999/-(per Piece)

X 1 Piece

BABY WHALE
(SMALL)

MRP: ₹1099/-(per Piece)

X 1 Piece

OCTOPUS
(SMALL)

Also Available in
(Black, White, Olive,)

MRP: ₹ 1099/-(per Piece)

X 1 Piece

POP CORN
(SMALL)

MRP: ₹1099/-(per Piece)

X 1 Piece

JELLY BELLY
(SMALL)

Also Available in
(Pink)

MRP: ₹1099/-(per Piece)

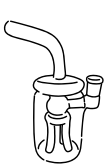

X 1 Piece

MAGIC MUSHROOM
(MEDIUM)

Also Available in
(Green, Yellow)

MRP: ₹1199/-(per Piece)

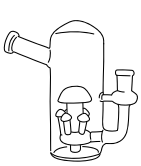

X 1 Piece

BABY ELEPHANT
(MEDIUM)

Also Available in
(Blue, Dark Green, Olive)

MRP: ₹ 1199/-(per Piece)

X 1 Piece

WILD CACTUS
(MEDIUM)

MRP: ₹ 1199/-(per Piece)

X 1 Piece

HENNY (MEDIUM)

MRP: ₹ 1199/-(per Piece)

X 1 Piece

CUTE DEVIL
(MEDIUM)

Also Available in
(Blue, White, Olive,)

MRP: ₹ 1199/-(per Piece)

X 1 Piece

Bongchie
TAKE IT EASY

follow to
stay updated on

Instagram

Bongchie India Pvt. Ltd.
2151/9B, New Patel Nagar
New Delhi – 110008
www.bongchie.com
E-mail: info@bongchie.com
Customer Care: +91 8010955822